CDC F Range

NEGATIVE PRESSURE ISOLATORS

ENVAIR TECHNOLOGY

Clean Air & Containment

Negative pressure isolators for safe handling of cytotoxics

Safe aseptic handling of cytotoxics

This range of negative pressure isolators has been designed to prevent pharmacy and laboratory workers from dangerous exposure to cytotoxic drugs. They also ensure products are protected from microbiological contamination.

With a choice of two or four gloves, wider or narrower working areas and additional exhaust fans and filters, these high performance isolators are easy to set up, operate and maintain.

KEY FEATURES

- Negative pressure for operator protection and safety
- EU GMP Grade A unidirectional airflow work area for aseptic work and product protection
- Transfer chambers with electromagnetic timed interlocks and high air change rates for total suppression of airborne contamination during material transfers in and out, and for rapid evaporation of disinfecting agents
- Automated pressure decay leak test for indicating results and monitoring trends
- PLC controls for easy set up, operation and maintenance
- Good access to all potentially contaminated areas to facilitate cleaning
- Safe to change main (primary) filter
- Two-glove and four-glove, ducted and recirculating models available

121/05_04/24

+44 (0)1706 228416
enquiries@envairtechnology.com
www.envairtechnology.com

Unit B11, Broadlands, Heywood Distribution Park, Heywood, Lancashire OL10 2TS, UK

Airflow diagram

Ducted (D) unit shown – Internal airflows are identical for recirculating and thimble extract versions.

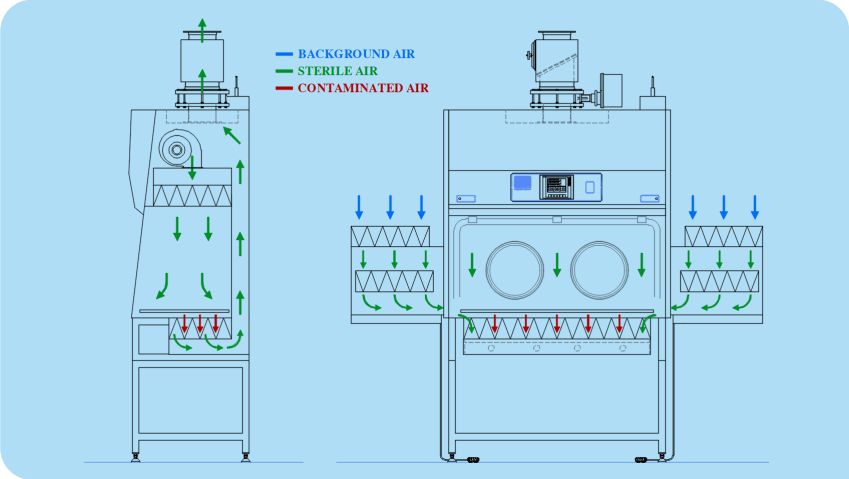

Model designations and dimensions

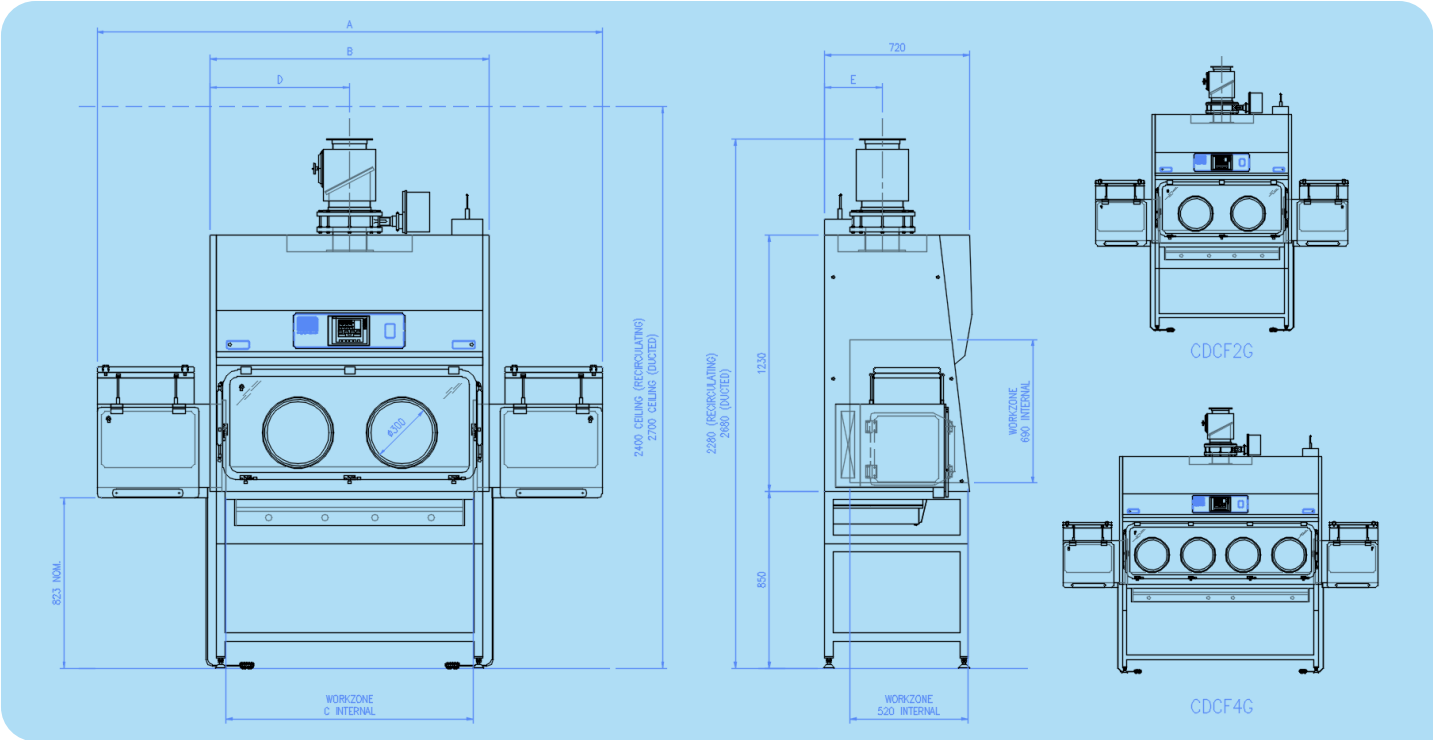

MODEL	MODEL DESCRIPTION	A (mm)	B (mm)	C (mm)	D (mm)	E (mm)	Wt (kg)	Power Watts	Exhaust m3/s
2G2D (1.2m)	Two glove ports, two transfer chambers, exhaust spigot for connection to dedicated exhaust system*	2432	1340	1180	670	280	330	600	0.1
2G2R (1.2m)	Two glove ports, two transfer chambers, additional secondary exhaust HEPA filter and integral exhaust fan. Recirculates air back to room.	2432	1340	1180	670	280	320	900	0.1
2G2D (1.5m)	Two glove ports, two transfer chambers, exhaust spigot for connection to dedicated exhaust system*	2750	1660	1495	830	280	365	660	0.1
2G2R (1.5m)	Two glove ports, two transfer chambers, additional secondary exhaust HEPA filter and integral exhaust fan. Recirculates air back to room.	2750	1660	1495	830	280	365	1000	0.1
4G2D (1.8m)	Four glove ports, two transfer chambers, exhaust spigot for connection to dedicated exhaust system*	3030	1940	1780	970	280	355	660	0.1
4G2R (1.8m)	Four glove ports, two transfer chambers, additional secondary exhaust HEPA filter and integral exhaust fan. Recirculates air back to room.	3030	1940	1780	970	280	385	1000	0.1

* Exhaust systems for all model D isolators require remote fans which should be ordered from Envair Technology or to Envair Technology's specification.

Envair Technology has a policy of continuous improvement and reserves the right to change this specification without notice.

121/05_04/24

+44 (0)1706 228416
enquiries@envairtechnology.com
www.envairtechnology.com
Unit B11, Broadlands, Heywood Distribution Park, Heywood, Lancashire OL10 2TS, UK

CDC F Range

NEGATIVE PRESSURE ISOLATORS

ENVAIR TECHNOLOGY

STANDARD SPECIFICATION		UPGRADES
Main chamber	• White polyester coated stainless steel internally • Unidirectional airflow (vertically downwards) - 0.4 m/s +/- 20% • Downflow air change rate indicative 1800 air changes per hour • 316L stainless steel removable dished worktray	• Optional 316L stainless steel polished internally • Optional stainless steel hanging rail with six hooks
Transfer devices	• Two D type double HEPA filtered transfer chambers with electromagnetic interlocks on adjustable timers, footswitches for inner doors and sliding trays • High air change rate indicative 2500 air changes per hour • Manual sealing lids for automated pressure decay leak test • White polyester coated stainless steel externally and internally	• Optional arrangement with one transfer chamber only • Option for electrically actuated sealing lids for fully automatic pressure decay leak test
Stand	• Polyester coated mild steel table frame with adjustable levelling feet (D models) or lockable castors (R models)	• Optional 'Vari-Height' electrically operated support frame (with flexible connection for ducted models)
Access	• Large opening acrylic visor, supported by gas springs in the open position, and complete with bonded 300 mm diameter sleeve ports • Fabric lined polyurethane sleeves, safe change cuff-rings and all associated O-rings for the Envair 'safer aseptic glove change' when used with sterile-wrapped, beaded, powder-free gloves suitable for cytotoxics	• Optional elliptical ports or other port diameters upon request • Alternative two part safe change cuff system available
Controls and electrics	• PLC control system with touch control membrane and password protection for different levels of access control • Touchscreen HMI displays critical operating parameters and interlock controls and status at all times • Internal pressure (Pa), Downflow Velocity (m/s), HEPA filter differential (Pa) and Total Air Change (TAC/Hr) displayed • Automated (prompted) pressure decay test • Latched audible and visible alarm for internal pressure and downflow air change rate failure and for transfer chamber door not closed. Alarm mute. • Battery back-up for alarms • Sealed LED Tubes giving 500 lux at the work surface • Electrics designed for 230v/50Hz1Ph supply	• Optional digital display of transfer chamber pressure • Optional fully automatic pressure decay leak test includes electrically actuated sealing for transfer chambers and high level exhaust • Optional alternative electrical supplies – to be specified by purchaser
Airflow and filtration	• The primary HEPA filter underneath the work tray filters the mixture of down-flow air and downflow air and supply air that has entered through the double HEPA-filtered transfer chambers • The combined filtered airstream passes up behind the main chamber to the downflow fan/HEPA filter system and the exhaust system. Both the exhaust system and the downflow fans are thus downstream of the primary HEPA filter • The primary HEPA filter can be sealed and removed into a bag for safe disposal • Potentially contaminated airways and plenums are under negative pressure • Vertically mounted anti-blowback damper and manual shut off valve on exhaust (D models only) • Remote extract fan required (D models only) • Integral exhaust HEPA filter and fan box with fan downstream of filter (R models only) • All HEPA filters H14 (BS EN 1822-1:2019)	• Optional connection for thimble system (R models only) • Optional exhaust carbon filter for compliance with AS NZ 4273:1999
Testing and maintenance	• DOP/particle counter test ports in visor of main chamber and in outer doors of transfer chambers • All maintenance from front of unit with lockable front panel for control hardware and downflow system	

OPTIONAL EXTRAS

- 316L stainless steel polished internally and externally
- 13 amp single splashproof socket
- Service taps
- Cable gland for computer connection
- Sealed computer screen in rear wall of main chamber
- CCTV monitoring and recording system
- Vapour phase hydrogen peroxide biodecontamination system
- Glove sleeve leak test disc with digital manometer
- Validation with documentation for IQ/OQ including FAT and SAT, or to full GAMP

+44 (0)1706 228416
enquiries@envairtechnology.com
www.envairtechnology.com
Unit B11, Broadlands, Heywood Distribution Park, Heywood, Lancashire OL10 2TS, UK

CDC F Range

NEGATIVE PRESSURE ISOLATORS

ENVAIR TECHNOLOGY

Clean Air & Containment

Optional integration with paperless electronic dispensing systems

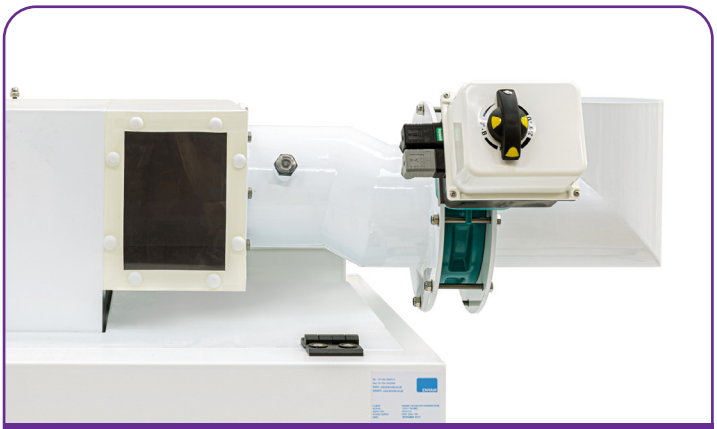

Optional connection for thimble system

Optional CCTV monitoring and recording system

Touchscreen HMI

STANDARDS COMPLIANCE

BS EN ISO 14644, EU GMP, BS EN 1822 (HEPA FILTERS), IEC 61010-1:2001 (ELECTRIC WIRING), 'PHARMACEUTICAL ISOLATORS' PHARMACEUTICAL, PRESS 2004, AS 4273:1999 (WHEN OPTIONAL ACTIVATED CARBON FILTER IS FITTED)

QUALITY STATEMENT

Envair Technology provides world class design and manufacturing expertise for a full portfolio of clean room and containment solutions. We work with healthcare, pharmaceutical and laboratory facilities around the world, to protect the safety of teams handling hazardous compounds and maintain product integrity. Our engineers and production team are committed to the highest standards of excellence, meeting the requirements of ISO 9001:2015. We provide a comprehensive maintenance, testing and parts service for all our products, to ensure a lifetime of trouble-free use.

121/05_04/24

+44 (0)1706 228416
enquiries@envairtechnology.com
www.envairtechnology.com

Unit B11, Broadlands, Heywood Distribution Park, Heywood, Lancashire OL10 2TS, UK